DS-2DE2A404IW-DE3/W(2.8-12mm) (C)
4 MP 4 × IR PTZ Network Wi-Fi Camera

Hikvision DS-2DE2A404IW-DE3/W(2.8-12mm) 4 MP 4 × IR PTZ Network Wi-Fi Camera can be widely used in multiple scenes, such as the corridor, office, convenience store, and restaurant.

- 1/3" progressive scan CMOS
- Up to 2560 × 1440@25fps resolution
- Excellent low-light performance with powered-by-DarkFighter technology
- 4 × optical zoom, 16 × digital zoom
- 120 dB WDR, 3D DNR, EIS, Regional Exposure, Regional Focus
- 12 VDC & PoE
- Up to 20 m IR distance
- IK10, IP66
- Support Wi-Fi
- Support H.265+/H.265 video compression
- Built-in microphone

Specifications

Camera Module	
Image Sensor	1/3" progressive scan CMOS
Min. Illumination	Color: 0.005 Lux @(F1.6, AGC ON) B/W:0.001 Lux @(F1.6, AGC ON) 0 Lux with IR
White Balance	Auto/Manual/ATW (Auto-tracking White Balance)/Indoor/Outdoor/Fluorescent Lamp/Sodium Lamp
Gain	Auto/Manual
Shutter Time	50Hz: 1/1 s to 1/30,000 s 60Hz: 1/1 s to 1/30,000 s
Day & Night	IR Cut Filter
Digital Zoom	16 ×
Privacy Mask	24 programmable privacy masks
Focus Mode	Auto/Semi-automatic/Manual
WDR	120 dB WDR
Lens	
Focal Length	2.8 mm to 12 mm, 4 × optical zoom
Zoom Speed	Approx. 2 s (optical lens, wide-tele)
Field of View	Horizontal field of view: 96.7° to 31.6° (Wide-Tele) Vertical field of view: 51.1° to 17.7° (Wide-Tele) Diagonal field of view: 115.1° to 36.3° (Wide-Tele)
Working Distance	10 mm to 1500 mm (wide-tele)
Aperture Range	F1.6 to F2.7
PTZ	
Movement Range (Pan)	0° to 355°
Pan Speed	Configurable, from 0.1°/s to 100°/s. Preset speed: 100°/s
Movement Range (Tilt)	0° to 90°
Tilt Speed	Configurable, from 0.1°/s to 100°/s. Preset speed: 100°/s
Proportional Zoom	Yes
Presets	300
Power-off Memory	Yes
Compression Standard	
Video Compression	Main Stream: H.265+/H.265/H.264+/H.264 Sub-stream: H.265/H.264/MJPEG Third Stream: H.265/H.264/MJPEG
H.264 Type	Baseline profile/main profile/high profile
H.264+	Yes
H.265+	Yes
Video Bitrate	32 Kbps to 16384 Kbps
Audio Compression	G.711alaw/G.711ulaw/G.722.1/G.726/MP2L2/PCM

Audio Bitrate	64 Kbps (G.711)/16 Kbps (G.722.1)/16 Kbps (G.726)/32 Kbps to 192 Kbps(MP2L2)
SVC	Yes
Smart Features	
Basic Event	Motion Detection, Video Tampering Detection, Exception
Smart Event	Face detection, intrusion detection, line crossing detection, region entrance detection, region exiting detection, object removal detection, unattended baggage detection, audio exception detection
Smart Record	ANR (Automatic Network Replenishment), dual-VCA
ROI	Main stream, sub-stream, and third stream respectively support four fixed areas.
IR	
IR Distance	20 m
Smart IR	Yes
Image	
Max. Resolution	2560 × 1440
Main Stream	50Hz: 25fps (2560 × 1440, 2048 × 1536, 1920 × 1080, 1280 × 960, 1280 × 720) 60Hz: 24fps (2560 × 1440), 30fps(2048 × 1536, 1920 × 1080, 1280 × 960, 1280 × 720)
Sub-Stream	50Hz: 25fps (704 × 576, 640 × 480, 352 × 288) 60Hz: 30fps (704 × 480, 640 × 480, 352 × 240)
Third Stream	50Hz: 25fps (1280 × 720, 704 × 576, 640 × 480, 352 × 288) 60Hz: 30fps (1280 × 720, 704 × 480, 640 × 480, 352 × 240)
Image Enhancement	3D DNR, EIS, Regional Exposure, Regional Focus
Network	
Network Storage	Built-in memory card slot, support microSD/SDHC/SDXC, up to 256 GB; NAS (NFS, SMB/ CIFS), ANR
Alarm Linkage	Alarm actions, such as Memory Card Video Record, Trigger Recording, Notify Surveillance Center, Upload to FTP/Memory Card/NAS, Send Email, etc.
Protocols	IPv4/IPv6, HTTP, HTTPS, Qos, FTP, SMTP, UPnP, SNMP, DNS, DDNS, NTP, RTSP, RTCP, RTP, TCP/IP, DHCP, PPPoE, Bonjour
API	ONVIF (Profile S, Profile G, Profile T), ISAPI, SDK
Simultaneous Live View	Up to 20 channels
User/Host	Up to 32 users. 3 user levels, administrator, operator and user
Security Measures	User authentication (ID and PW), Host authentication (MAC address); HTTPS encryption; IEEE 802.1x port-based network access control; IP address filtering
Client	iVMS-4200, Hik-Central, Hik-Connect
Web Browser	IE 8 to 11,Chrome 31.0+, Firefox 30.0+, Edge 16.16299+
Wi-Fi	
Standard	IEEE802.11b, 802.11g, 802.11n, transmission distance: 50 m (without interference)
Frequency Range	2.400 GHz to 2.483 GHz
Channel Bandwidth	20/40 MHz
Security	64/128-bit WEP,WPA/WPA2,WPA-PSK/WPA2-PSK,WPS
Transmission Rate	11b: 11Mbps; 11g: 54Mbps; 11n (20MHz): 150Mbps; 11n (40MHz): 300Mbps

Interface	
Audio Interface	1-ch audio input (mic in/line in) and 1-ch audio output (line out) 1 built-in microphone
Network Interface	1 RJ45 10 M/100 M Ethernet, PoE
Power Output	12 VDC, max. 60 mA
General	
Language (Web Browser Access)	32 languages. English, Russian, Estonian, Bulgarian, Hungarian, Greek, German, Italian, Czech, Slovak, French, Polish, Dutch, Portuguese, Spanish, Romanian, Danish, Swedish, Norwegian, Finnish, Croatian, Slovenian, Serbian, Turkish, Korean, Traditional Chinese, Thai, Vietnamese, Japanese, Latvian, Lithuanian, Portuguese (Brazil)
Power	12 VDC, 1.5 A (Max. 10.9 W, including Max. 4.2 W for IR) PoE (802.3af), 36 to 57 VDC, 0.35 A (Max. 12.2 W, including max. 4.2 W for IR)
Working Environment	Temperature: -20°C to 60°C (-4°F to 140°F), humidity: ≤ 90%
Protection Level	IP66 standard, IK 10, surge protection, ±2kV Line to Gnd, ±1kV Line to Line, IEC61000-4-5
Material	Aluminum alloy, PC, PC+ABS
Dimension	Φ 130.7 mm × 101.7 mm (Φ 5.15" × 4.00")
Weight	Approx. 0.53 kg (1.17 lb.)

DORI

The DORI (detect, observe, recognize, identify) distance gives the general idea of the camera ability to distinguish persons or objects within its field of view. It is calculated based on the camera sensor specification and the criteria given by EN 62676-4: 2015.

DORI	Detect	Observe	Recognize	Identify
Definition	25 px/m	63 px/m	125 px/m	250 px/m
Distance (Tele)	180.0 m (590.6 ft)	71.4 m (234.3 ft)	36.0 m (118.1 ft)	18.0 m (59.1 ft)

Available Model

DS-2DE2A404IW-DE3/W(2.8-12 mm) (C), 12 VDC & PoE

Typical Application

Hikvision products are classified into three levels according to their anti-corrosion performance. Refer to the following description to choose for your using environment.

This model has NO SPECIFIC PROTECTION.

Level	Description
Top-level protection	Hikvision products at this level are equipped for use in areas where professional anti-corrosion protection is a must. Typical application scenarios include coastlines, docks, chemical plants, and more.
Moderate protection	Hikvision products at this level are equipped for use in areas with moderate anti-corrosion

	demands. Typical application scenarios include coastal areas about 2 kilometers (1.24 miles) away from coastlines, as well as areas affected by acid rain.
No specific protection	Hikvision products at this level are equipped for use in areas where no specific anti-corrosion protection is needed.

Dimensions

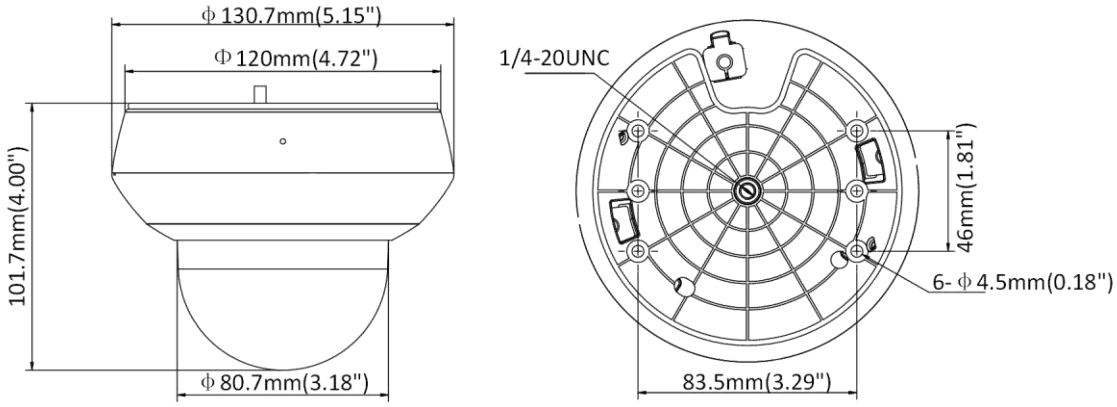

Accessory

Optional

DS-1294ZJ-PT
Wall Mount

DS-1297ZJ
Pendant Mount
(extendable)

DS-1299ZJ
Pendant Mount

DS-1297ZJ-ES
Pendant Mount
(extendable)

DS-1297ZJ-M
Pendant Mount
(extendable)

MSA-C1500IC12.0-18P-US
MSA-C1500IC12.0-18P-GB
MSA-C1500IC12.0-18P-JP
Power adapter

LAS60-57CN-RJ45
Hi-PoE Midspan